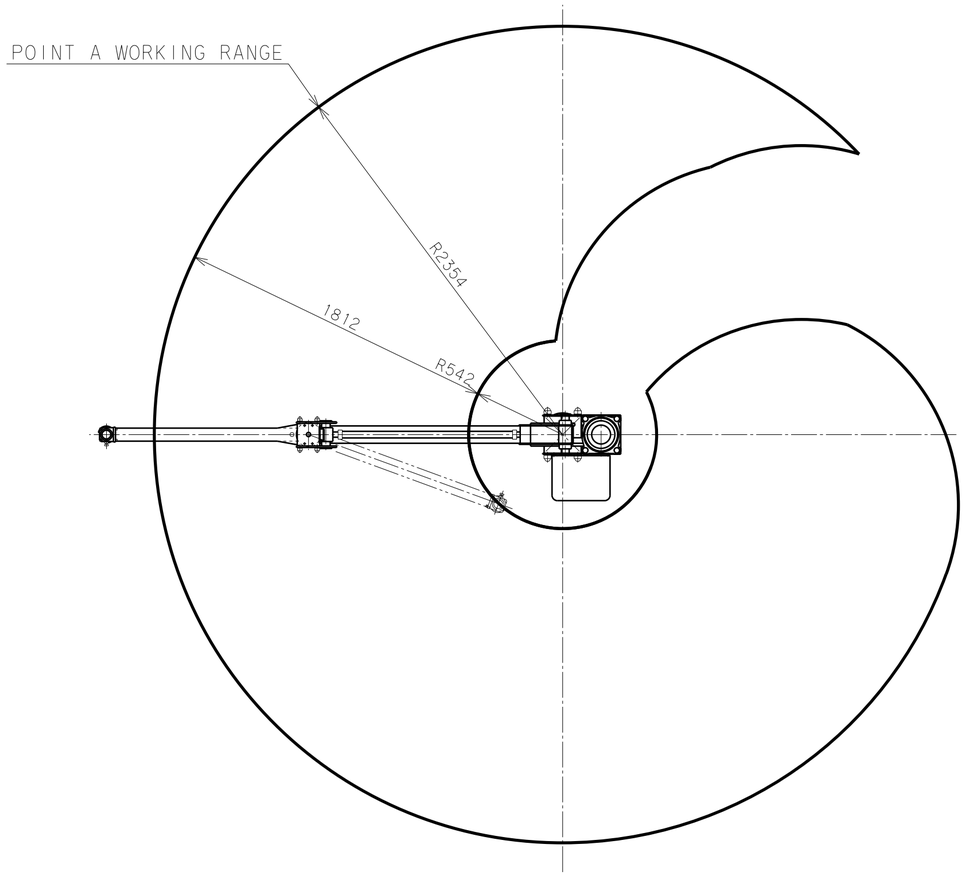

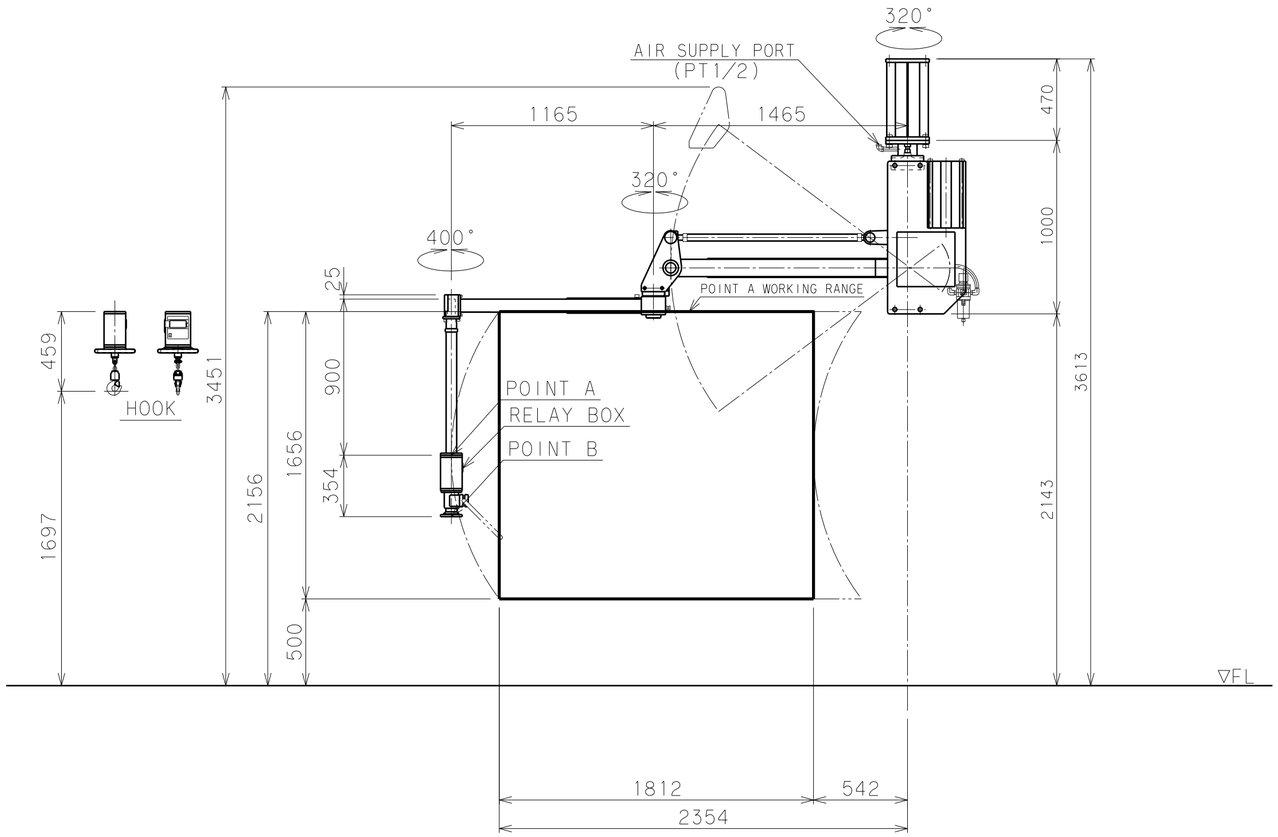

BALAMAN SPECIFICATIONS	
MODEL	U2BMS-150C
MAX.LOAD	150kg(BELOW POINT A) 138kg(BELOW POINT B)
MAX.RADIUS	R2354 mm
HORIZONTAL STROKE	1812 mm
VERTICAL STROKE	1656 mm
MAX.WORKING HEIGHT	2156 mm
MAX.MACHINE HEIGHT	3451 mm
AIR SUPPLY	0.54 MPaG
AIR CONSUMPTION	192NL/min (15 SEC CYCLE)
POWER SUPPLY	SINGLE-PHASE AC85~AC264V 50/60Hz 0.1KVA
CONTROL METHOD	
COATING	LN-15(JPMA BLACK) LN-93(JPMA WHITE)
MAIN UNIT MASS	APPROX. 280kg
BASE UNIT MASS	APPROX. 20kg
RELAY BOX MASS	12kg
WORK PIECE MASS	kg

REMARKS
ACCESSORIES:PRESSURE REDUCE SET
:POWER SUPPLY BOX