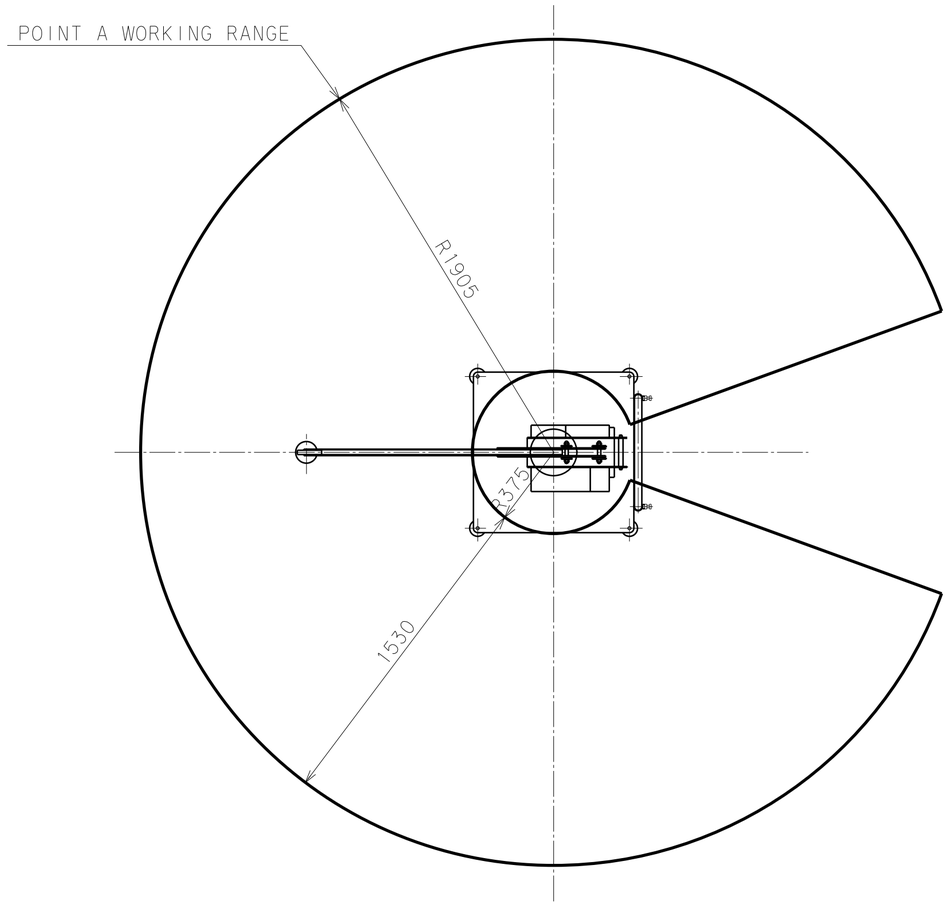

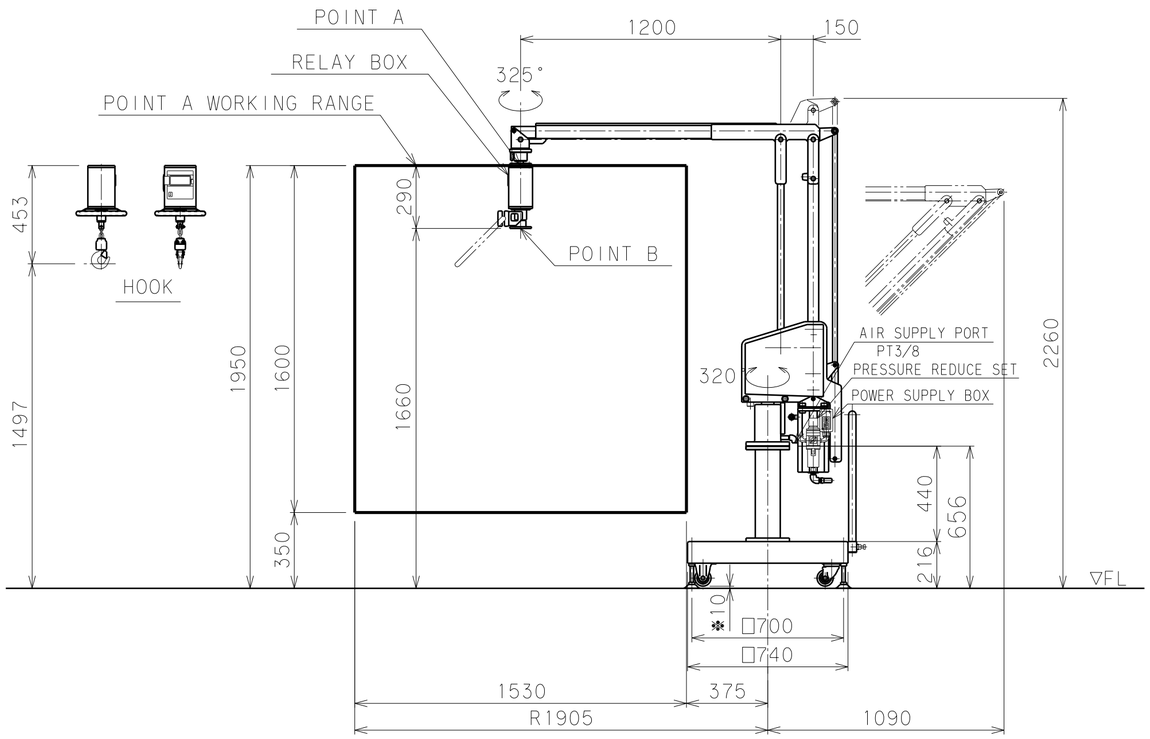

BALAMAN SPECIFICATIONS	
MODEL	U2BMG-50W
MAX.LOAD	50kg(BELOW POINT A) 42kg(BELOW POINT B)
MAX.RADIUS	R1950 mm
HORIZONTAL STROKE	1530 mm
VERTICAL STROKE	1600 mm
MAX.WORKING HEIGHT	1950 mm
MAX.MACHINE HEIGHT	2260 mm
AIR SUPPLY	0.54 MPaG
AIR CONSUMPTION	75NL/min (10 SEC CYCLE)
POWER SUPPLY	SINGLE-PHASE AC85~AC264V 50/60Hz 0.1KVA
CONTROL METHOD	
COATING	LN-15(JPMA BLACK) LN-93(JPMA WHITE)
MAIN UNIT MASS	APPROX. 135kg
BASE UNIT MASS	APPROX. 450kg
RELAY BOX MASS	8kg
WORK PIECE MASS	kg

REMARKS
ACCESSORIES:PRESSURE REDUCE SET
:POWER SUPPLY BOX