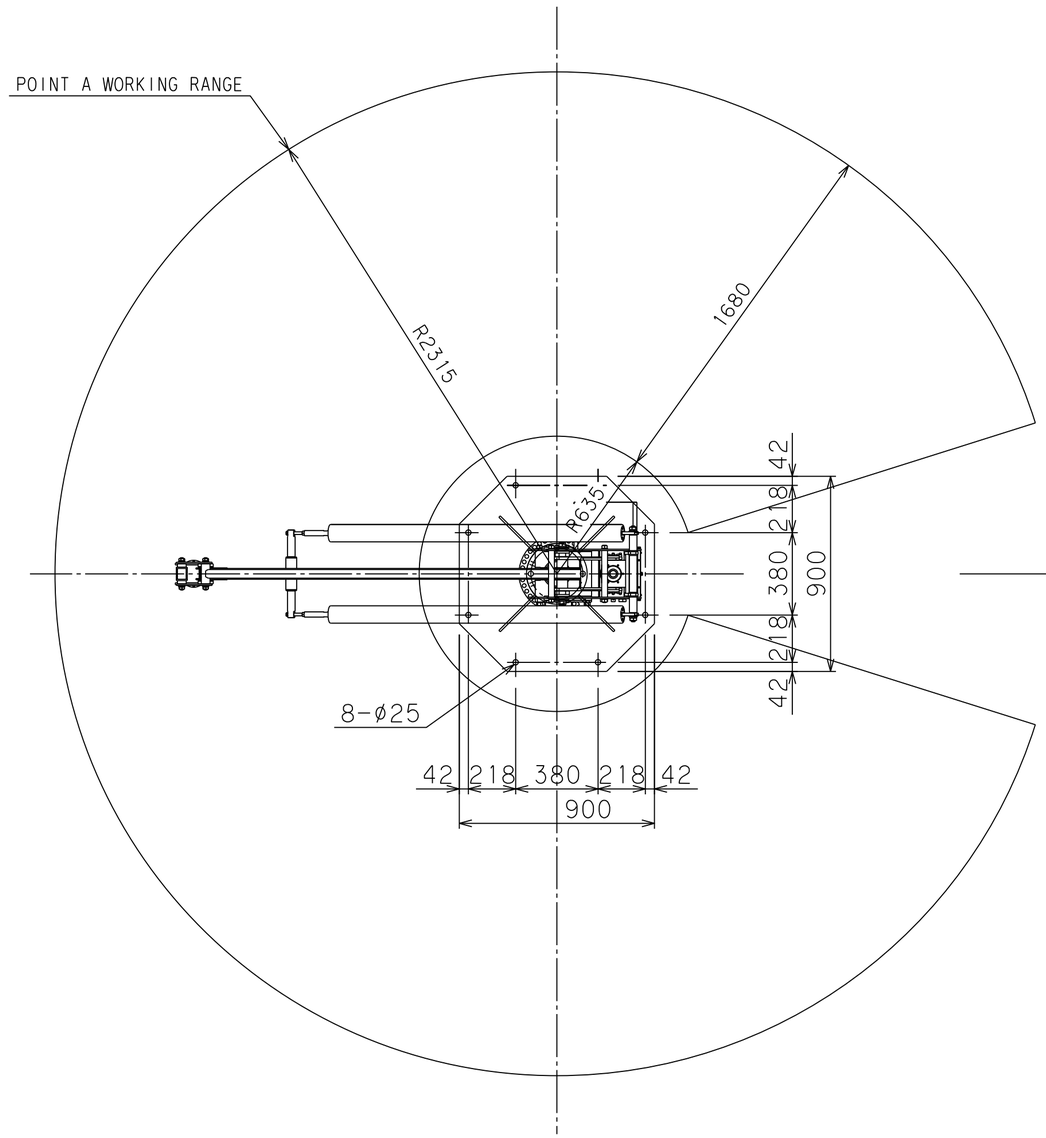

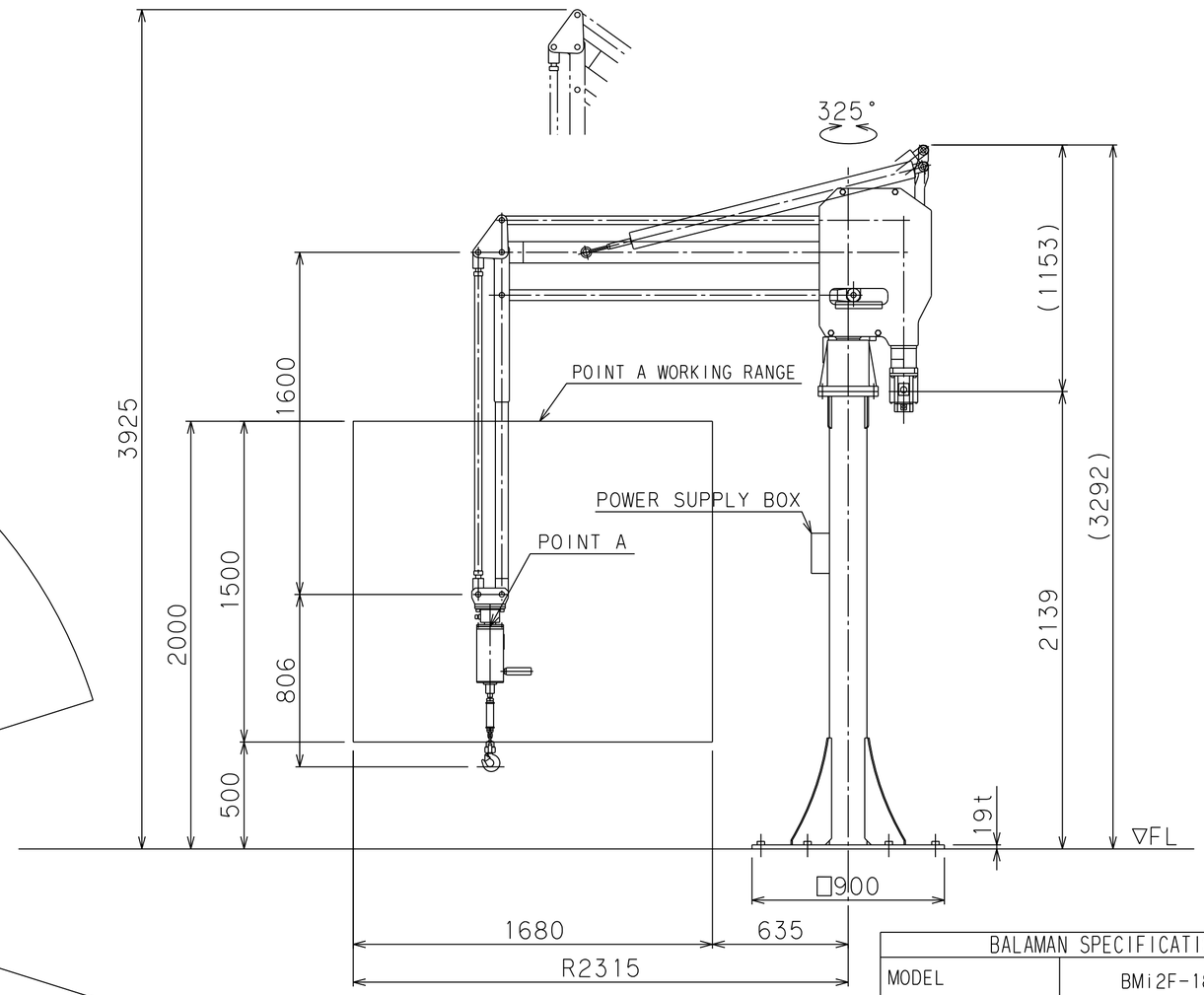

BALAMAN SPECIFICATIONS	
MODEL	BMi2F-180
MAX.LOAD	180kg(INCLUDING ATTACHMENT)
MAX.RADIUS	R2315 mm
HORIZONTAL STROKE	1680 mm
VERTICAL STROKE	1500 mm
MAX.WORKING HEIGHT	2000 mm
MAX.MACHINE HEIGHT	3925 mm
LIFTING SPEED	400 mm/s
POWER SUPPLY	Three-Phase AC200/220V±10% 50/60Hz 2.5kVA
CONTROL SYSTEM	CRANE AND BALANCE
COATING	MAIN BODY & BASE F-58(BLUE) G-63(SILVER) ATTCHMENT 10R5.5/14.5 (MUNSELL No.)
MAIN UNIT MASS	APPROX. 265kg
BASE UNIT MASS	APPROX. 200kg
REMARKS ACCESSORIES: POWER SUPPLY BOX	