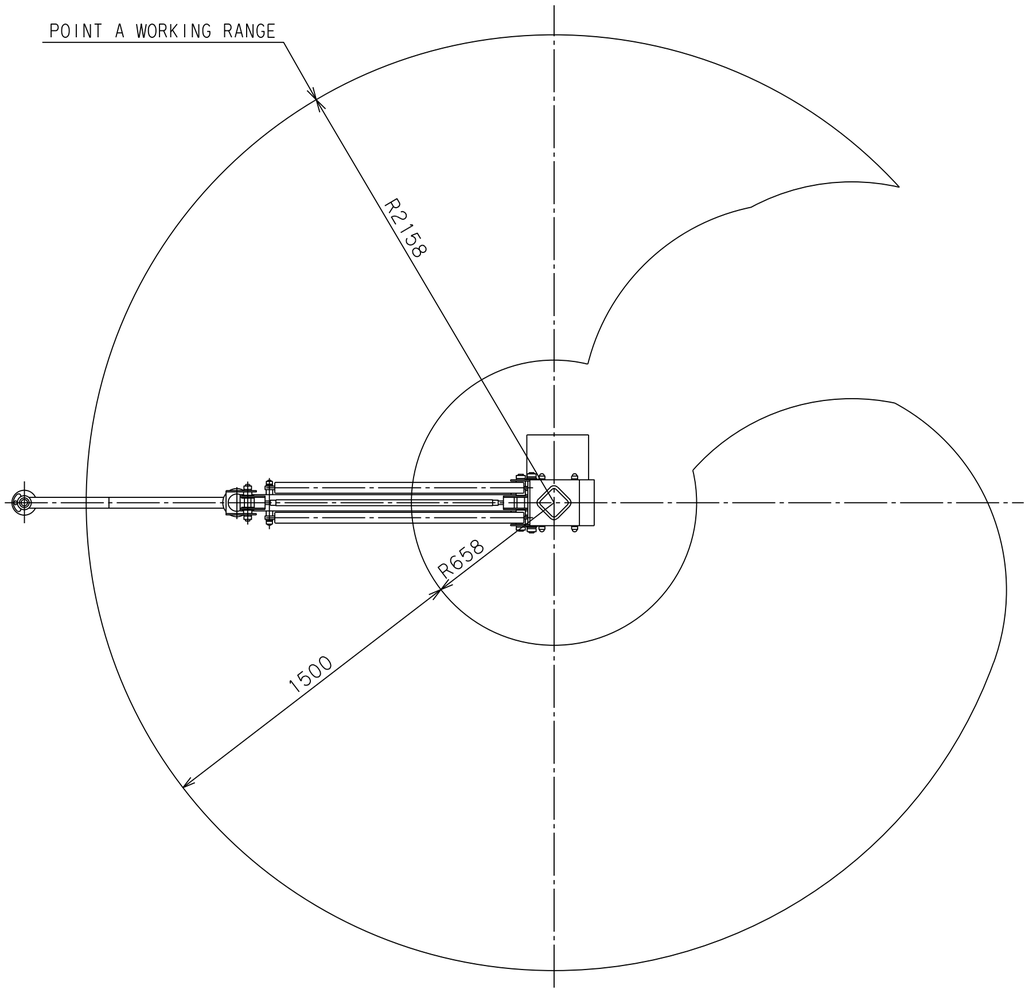

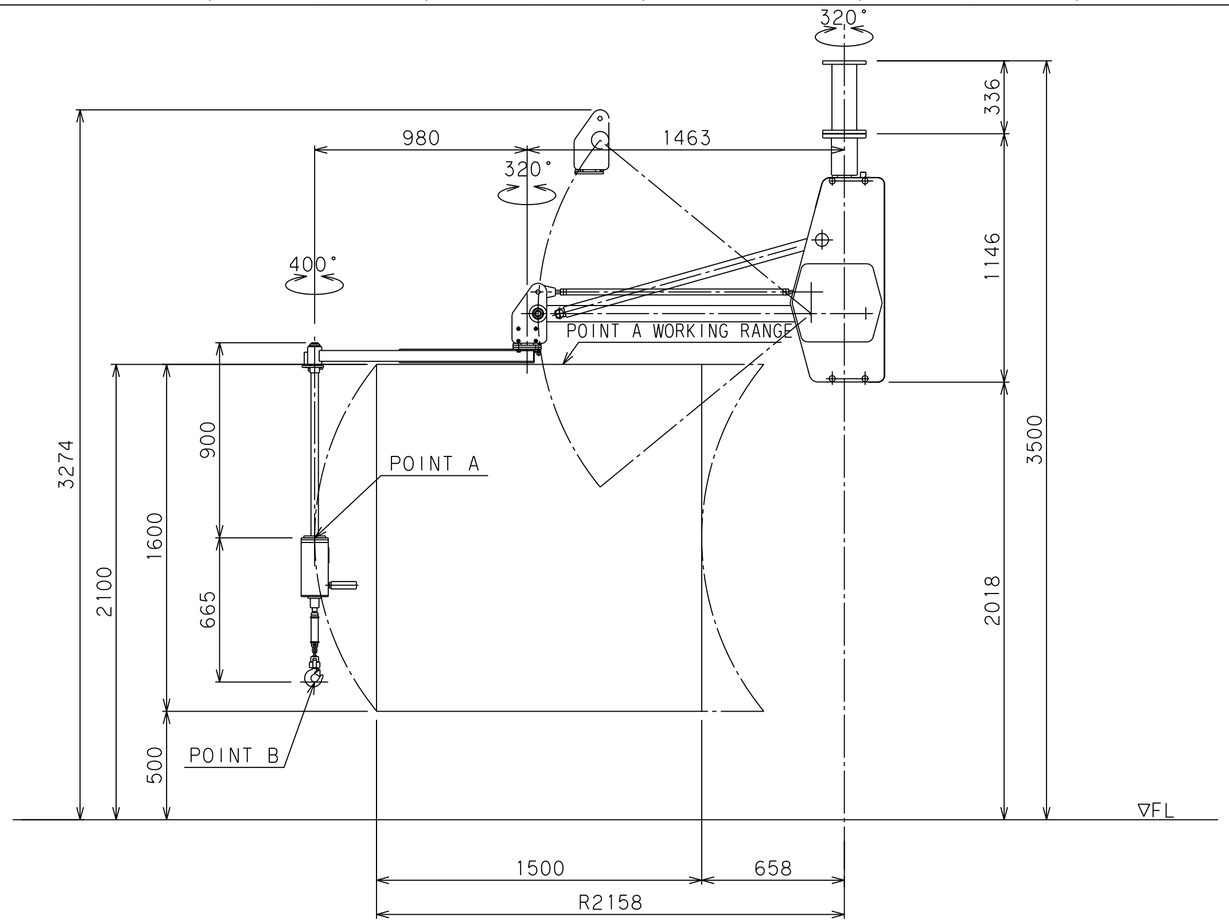

BALAMAN SPECIFICATIONS	
MODEL	BMi2S-50C
MAX.LOAD	50kg(BELOW POINT A) 43kg(BELOW POINT B)
MAX.RADIUS	R2158 mm
HORIZONTAL STROKE	1500 mm
VERTICAL STROKE	1600 mm
MAX.WORKING HEIGHT	2100 mm
MAX.MACHINE HEIGHT	3274 mm
LIFTING SPEED	430 mm/s
POWER SUPPLY	Three-Phase AC200/220V±10% 50/60Hz 1.3kVA
CONTROL SYSTEM	CRANE AND BALANCE
COATING	MAIN BODY & BASE F-58(BLUE) G-63(SILVER) ATTCHMENT 10R5.5/14.5 (MUNSELL No.)
RELAY BOX MASS	7kg
MAIN UNIT MASS	APPROX. 150kg
BASE UNIT MASS	APPROX. 13kg
REMARKS ACCESSORIES: POWER SUPPLY BOX	