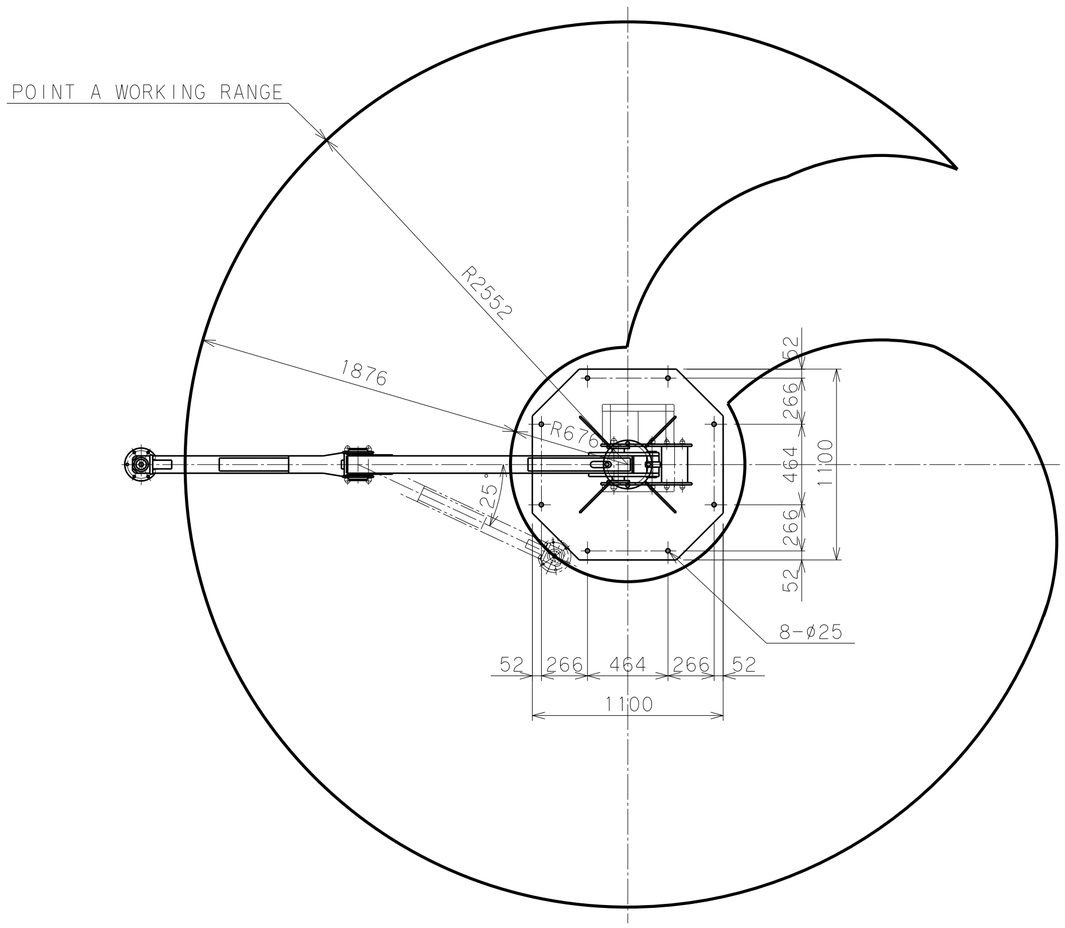

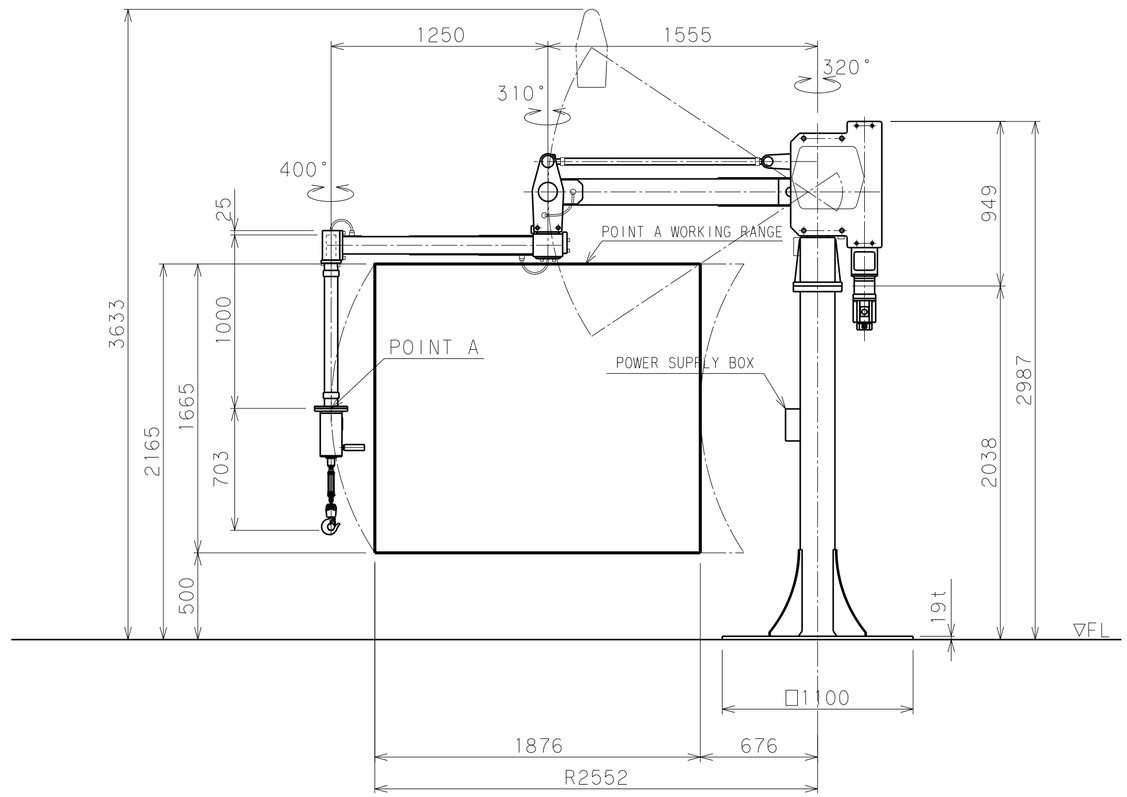

BALAMAN SPECIFICATIONS	
MODEL	BMi2S-250
MAX.LOAD	250kg(INCLUDING ATTACHMENT)
MAX.RADIUS	R2552 mm
HORIZONTAL STROKE	1876 mm
VERTICAL STROKE	1665 mm
MAX.WORKING HEIGHT	2165 mm
MAX.MACHINE HEIGHT	3633 mm
LIFTING SPEED	364 mm/s
POWER SUPPLY	Three-Phase AC200/220V±10% 50/60Hz 2.9kVA
CONTROL SYSTEM	CRANE AND BALANCE
COATING	MAIN BODY & BASE F-58(BLUE) G-63(SILVER) ATTCHMENT 10R5.5/14.5 (MUNSELL No.)
MAIN UNIT MASS	APPROX. 410kg
BASE UNIT MASS	APPROX. 330kg
REMARKS ACCESSORIES: POWER SUPPLY BOX	