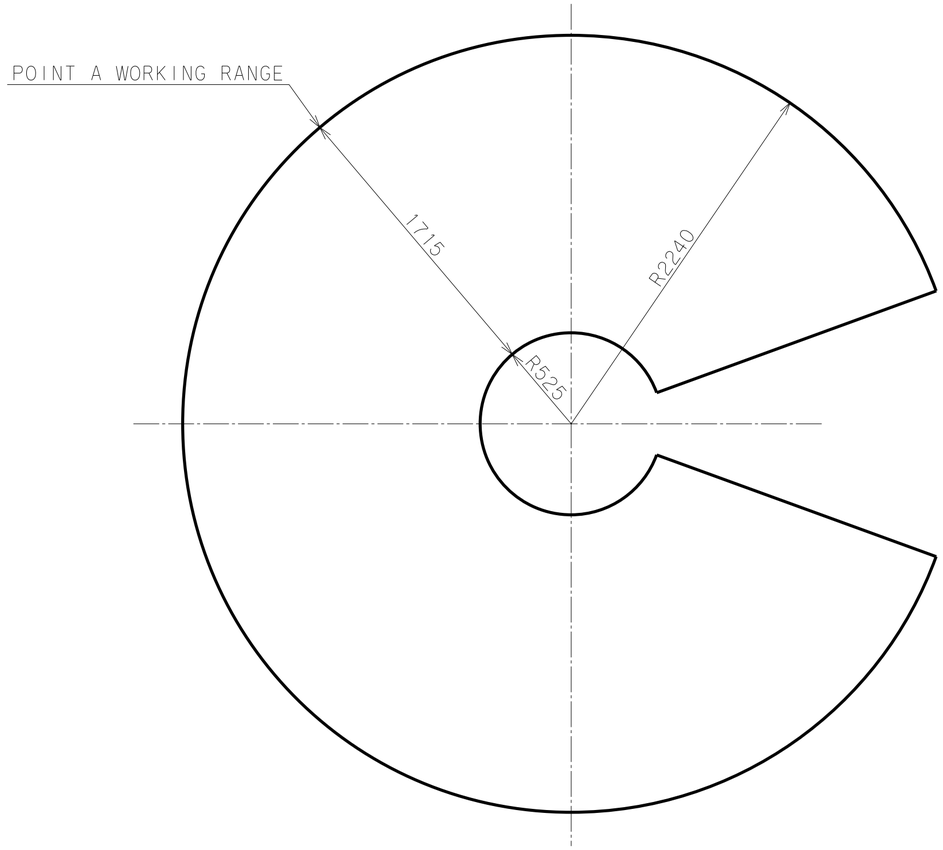

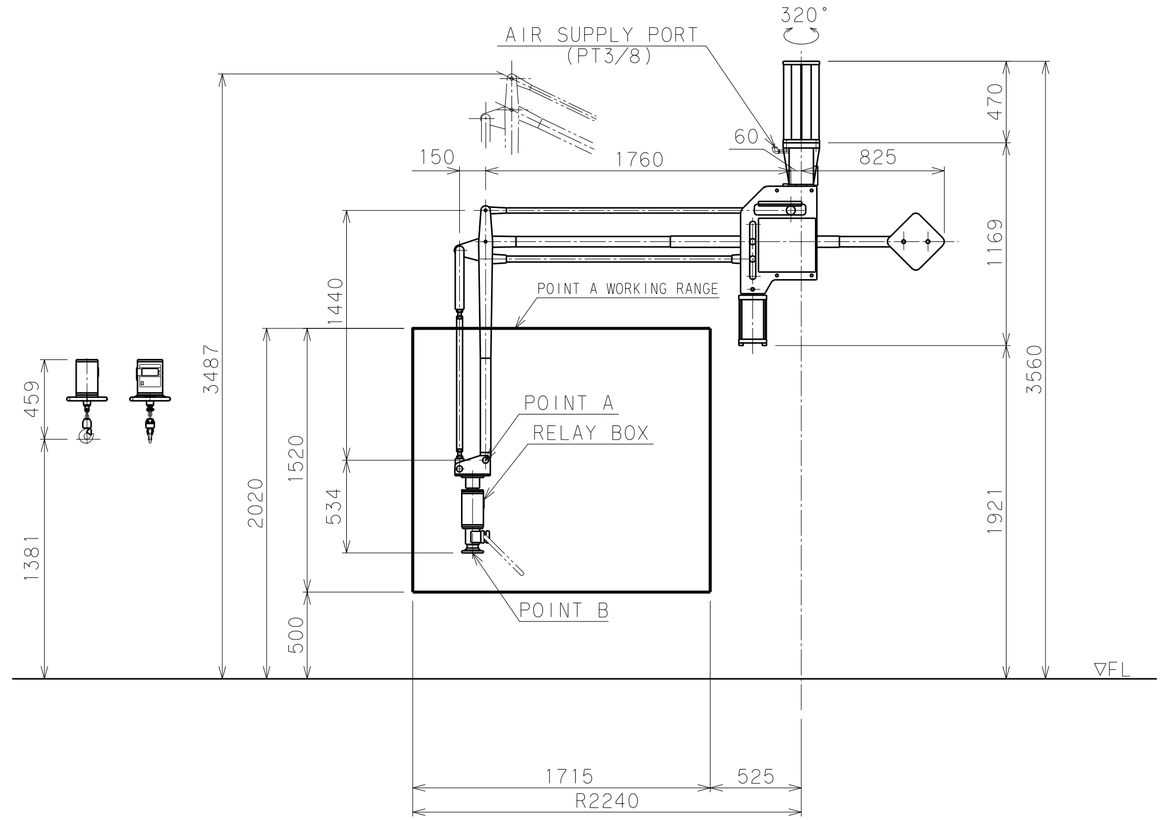

BALAMAN SPECIFICATIONS	
MODEL	U2BMC-75W
MAX.LOAD	72kg(BELOW POINT A) 56kg(BELOW POINT B)
MAX.RADIUS	R2240 mm
HORIZONTAL STROKE	1715 mm
VERTICAL STROKE	1520 mm
MAX.WORKING HEIGHT	2020 mm
MAX.MACHINE HEIGHT	3487 mm
AIR SUPPLY	0.54 MPaG
AIR CONSUMPTION	102L/min (10 SEC CYCLE)
POWER SUPPLY	SINGLE-PHASE AC85~AC264V 50/60Hz 0.1KVA
CONTROL METHOD	
COATING	LN-15(JPMA BLACK) LN-93(JPMA WHITE)
MAIN UNIT MASS	APPROX. 200kg
BASE UNIT MASS	APPROX. 15kg
SWIVEL UNIT MASS	4kg
RELAY BOX MASS	12kg
WORK PIECE MASS	kg
REMARKS ACCESSORIES:PRESSURE REDUCE SET :POWER SUPPLY BOX	